SES9672LCL REV.8

CUST: SCHRADER ENVIRONMENTAL	SIZE: 96 X 72	PO #:	W.O. #:
MOD. #: SES9672LCL REV.8	INT: DEVOE 233H		QTY:
SHEET: 3 OF 3	WT: 5,499 LBS.	EXT: N69F-08SF HUNTER GREEN	DUE:
	100 PSI	TT_____ HT_____	SN:

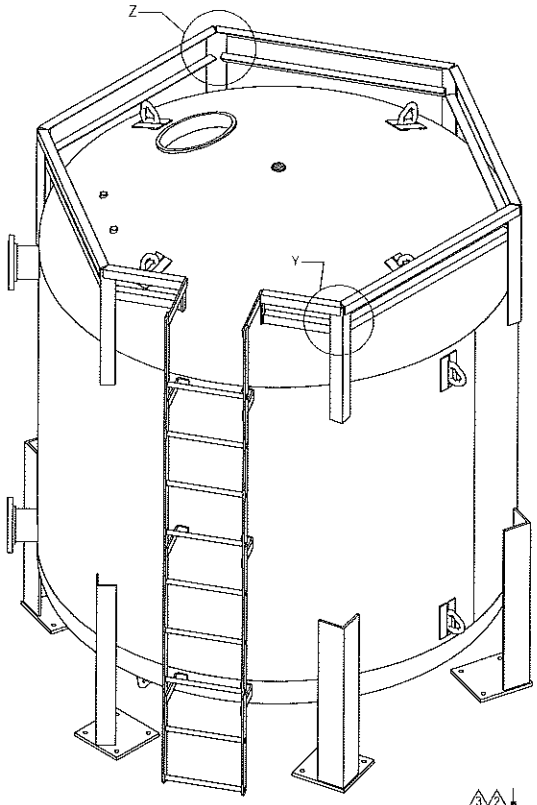

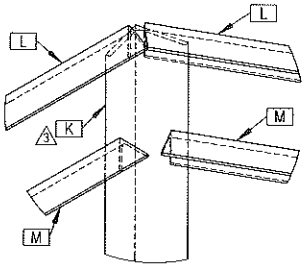

DETAIL Z
SCALE 1 : 6

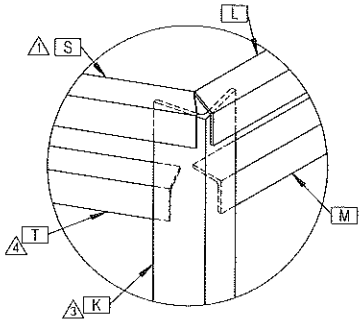

DETAIL Y
SCALE 1 : 6

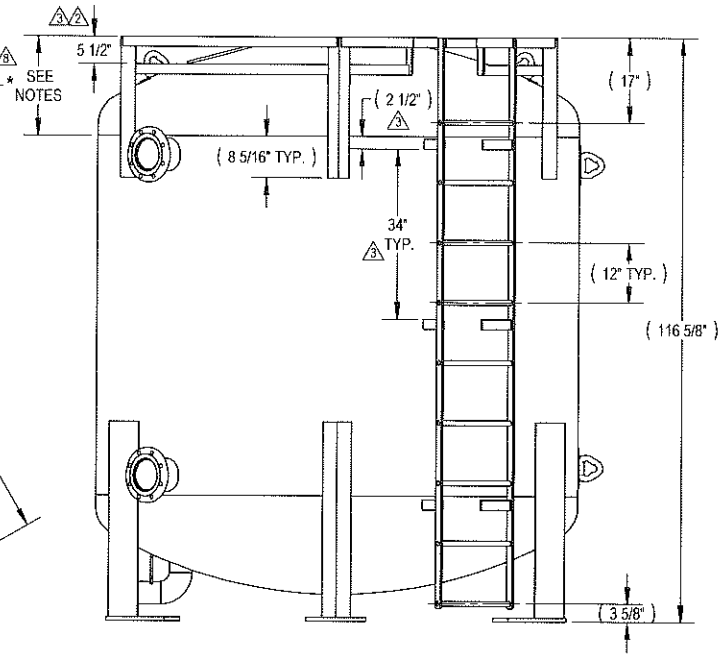

NOTES:
1. ASSEMBLE LADDER AND RAILING WITH TOP SURFACES LEVEL WITH TOP OF TANK.
2. **TOP OF LADDER AND RAILING NOT TO EXCEED OVERALL HEIGHT OF TANK.**
3. OVERALL HEIGHT DOES NOT INCLUDE MANWAY HARDWARE.

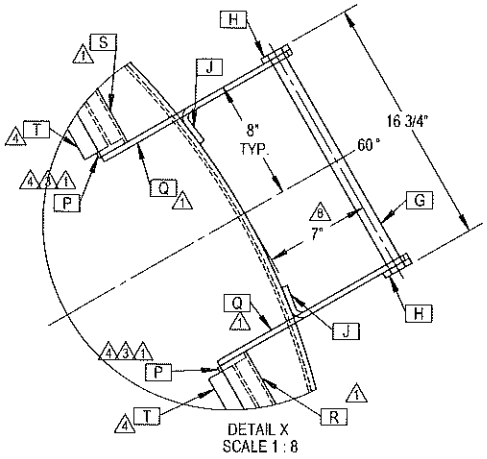

DETAIL X
SCALE 1 : 8

ATTENTION:
LADDER AND STRUCTURE ON TOP OF TANK DO NOT MEET OSHA REQUIREMENTS FOR PERSONNEL PROTECTION.

96 X 72 NON-CODE
DRAWING APPROVAL
SAFETY RELIEF DEVICES SHALL BE THE RESPONSIBILITY OF THE END USER
PLEASE INDICATE APPROVAL FOR DRAWING & RETURN TO QUICK TANKS
☐ APPROVED AS DRAWN PROCEED WITH FABRICATION
☐ APPROVED AS NOTED PROCEED WITH FABRICATION IN ACCORDANCE WITH NOTED CHANGES RESUBMIT CORRECTED DRAWING
☐ DISAPPROVED DO NOT FABRICATE RESUBMIT DRAWING FOR APPROVAL
BY DATE

NON-CODE

REV.	DESCRIPTION	DATE	APPROVED
	SEE SHEET 1 FOR REVISIONS		

DATE: 4/15/08 DRAWN BY: JM SIZE: B SCALE: NTS

SES9672LCL REV.8

THIS PRINT, IN ALL MEDIA FORMATS, IS THE SOLE PROPERTY OF QUICK TANKS, INC. REPRODUCTION OR DISSEMINATION IS STRICTLY PROHIBITED WITHOUT PRIOR WRITTEN CONSENT.

SES9672LCL REV.8

CUST: SCHRADER ENVIRONMENTAL	SIZE: 96 X 72	PO #:	W.O. #:
MOD. #: SES9672LCL REV.8	INT: DEVOE 233H		QTY:
SHEET: 2 OF 3	WT: 5,499 LBS.	EXT: N69F-08SF HUNTER GREEN	DUE:
	100 PSI	TT_____ HT_____	SN:

MAX. OVERALL TANK HEIGHT ③
NOT TO EXCEED 117-3/4"

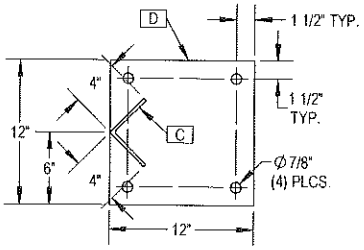

FOOT PAD DETAIL ⑦
(2) PLCS

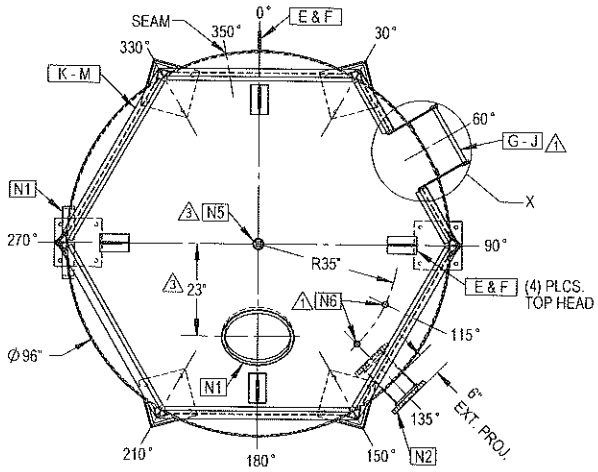

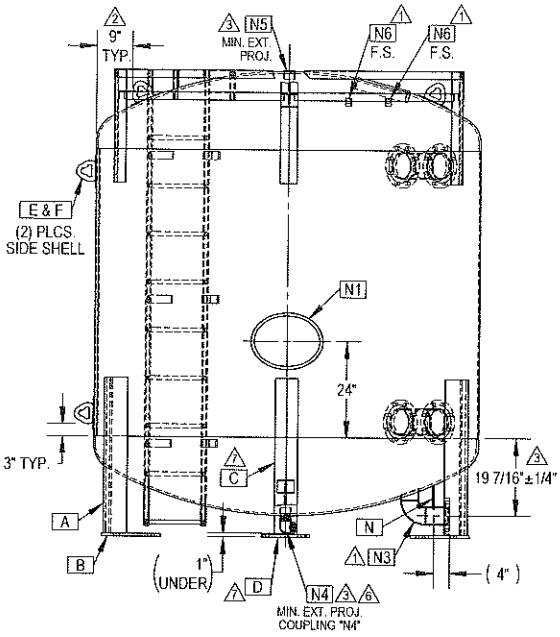

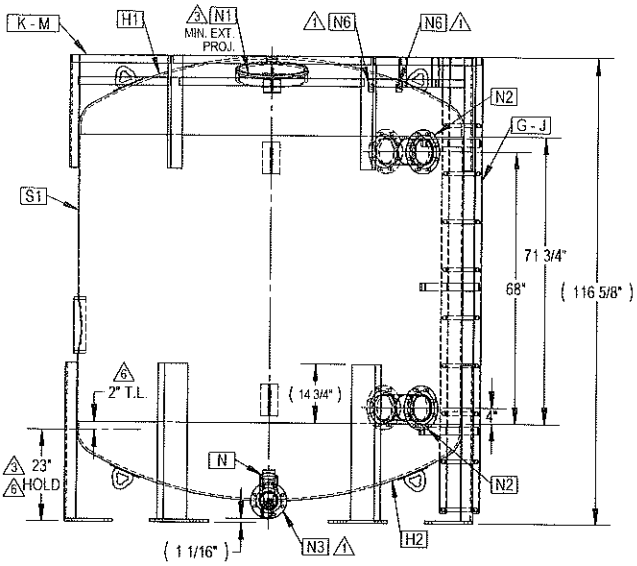

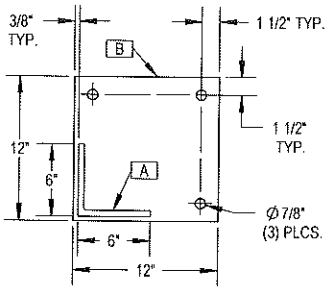

FOOT PAD DETAIL
(4) PLCS

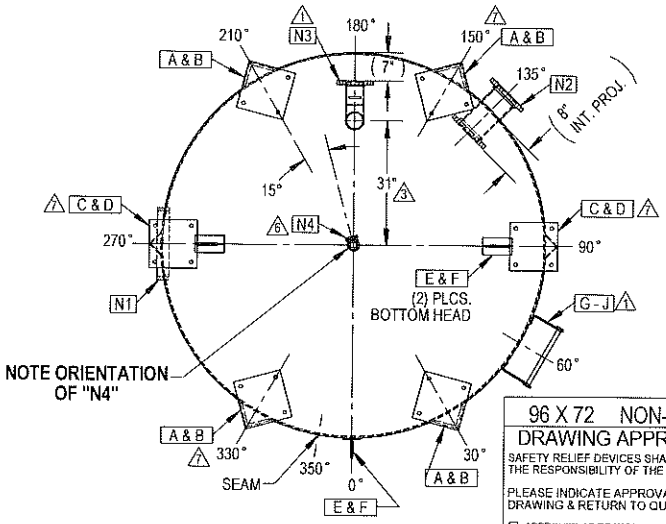

NOTES:
1. DIMENSIONS SHOWN IN ( ) ARE FOR REFERENCE ONLY.
2. NO LINING WARRANTY ABOVE 120°F.
3. EXTERNAL BOLT HOLES OF FLANGES TO STRADDLE CENTERLINES.
4. LEAVE A 5/16" GAP BETWEEN LIFT LUG REPADS. WELD CONTINUOUSLY AROUND EACH PART.
5. SCRIBE TANGENT LINE AT 90° INTERVALS ON BOTTOM HEAD AS SHOWN.
⑥

96 X 72 NON-CODE
DRAWING APPROVAL
SAFETY RELIEF DEVICES SHALL BE THE RESPONSIBILITY OF THE END USER
PLEASE INDICATE APPROVAL FOR DRAWING & RETURN TO QUICK TANKS
☐ APPROVED AS DRAWN. PROCEED WITH FABRICATION
☐ APPROVED AS NOTED. PROCEED WITH FABRICATION IN ACCORDANCE WITH NOTED CHANGES. RESUBMIT CORRECTED DRAWING
☐ DISAPPROVED. DO NOT FABRICATE. RESUBMIT DRAWING FOR APPROVAL
BY DATE

NON-CODE

REV.	DESCRIPTION	DATE	APPROVED
④	DEL. "M" (QTY. 1); ADDED "T" - JM	3/18/09	
③	REDUCED OVERALL TANK HEIGHT - JM	2/13/09	
②	RAISED RAILS "M", MOVED LIFT LUGS - JM	2/6/09	
①	CHANGES PER CUSTOMER REQUEST - JM	4/18/08	

DATE: 4/15/08 DRAWN BY: JM SIZE: B SCALE: NTS

SES9672LCL REV.8

THIS PRINT, IN ALL MEDIA FORMATS, IS THE SOLE PROPERTY OF QUICK TANKS, INC. REPRODUCTION OR DISSEMINATION IS STRICTLY PROHIBITED WITHOUT PRIOR WRITTEN CONSENT.

SES9672LCL REV.8

CUST: SCHRADER ENVIRONMENTAL	SIZE: 96 X 72	PO #	W.O. #:
MOD. #: SES9672LCL REV.8	INT: DEVOE 233H △6		QTY:
SHEET: 1 OF 3	WT: 5,499 LBS.	EXT: N69F-08SF HUNTER GREEN	DUE:
	100 PSI	TT____ HT____	SN:

ITEM	Part #	QTY.	Description	NOTES
S1	578105	1	SHELL 5/16" X 72" X 301-1/2" SA-455	PLASMA WEIGHT: 1,968 LBS.
H1	239600	1	TOP HEAD 96" X 1/2" ASME F&D SA-516-70	PLASMA WEIGHT: 1,249 LBS.
H2	239600	1	BOTTOM HEAD 96" X 1/2" ASME F&D SA-516-70	PLASMA WEIGHT: 1,249 LBS.
N1	363111	2	MANHOLE ASSEMBLY 12" X 16" X 3/4" X 3"	MIN. EXTERNAL PROJ. IN TOP HEAD ONLY △3
N2	738008	4	SLIP-ON FLANGE 6" R.F. 150#	
N2	157123	2	6" SCH. 40 PIPE X 13-9/16" LONG	
N3	738006	1	SLIP-ON FLANGE 4" R.F. 150#	
N3	157120△1	1	4" SCH. 40 PIPE X 5-5/8" LONG	WELDED TO SLIP-ON FLANGE
N3	346007	1	ELBOW 4" SHORT RAD. TUBE TURN	
N3	157120	1	4" SCH. 40 PIPE X 4" LONG	TRIM FOR MIN. INTERNAL PROJ.
N4	320803△6△3	1	FULL COUPLING 2" NPT 304 S.S.	MIN. EXTERNAL PROJECTION △3
N4	399990	1	PIPE NIPPLE 2" NPT X 2" LONG 304 S.S.	
N4	399991	1	FEMALE ELBOW 2" NPT 304 S.S.	
N5	320800	1	FULL COUPLING 2" NPS BLK	MIN. EXTERNAL PROJECTION △3
N5	340801△3	1	PIPE PLUG 2" C.S. GALV.	
N6	320504△1	2	FULL COUPLING 1" NPT 304 S.S.	
A	153015△3	4	ANGLE LEG 6" X 6" X 1/2" X 39" LONG	
B	150041	4	FOOT PAD 12" X 12" X 3/4" W/ (3) HOLES	PLASMA
C	153006△3	2	△6△7 ANGLE LEG 4" X 4" X 1/4" X 39" LONG	
D	150041	2	△6△7 FOOT PAD 12" X 12" X 3/4" W/ (4) HOLES	PLASMA
E	380096	8	LIFTING LUG MEDIUM	
F	780005	16	LIFT LUG REPAD 1/4" X 2" X 8"	
G	156120	9	LADDER RUNG 1" CR X 16-3/4" LONG	
H	150045	2	LADDER SIDE RAIL 3/8" X 2" X 114" LONG W/ HOLES	
J	150045	6	△8 LADDER BRACKET 3/8" X 2" X 10-1/8" LONG W/ BEND	
K	153005△3	6	SAFETY SUPPORT 3" X 3" X 1/4" X 28" LONG	
L	153001△1	5	TOP SAFETY RAIL 2" X 2" X 3/16" X 49-1/4" LONG	
M	153001△4	5	BOTTOM SAFETY RAIL 2" X 2" X 3/16" X 46" LONG	NO MITER REQUIRED
N	150028△1△3	1	PIPE BRACE 3/8" X 3" X 5-7/8" LONG	PLASMA
P	150045△1△3	2	△3△4 VERTICAL SUPPORT 3/8" X 2" X 7-5/16" LONG	
Q	150045△1△8	2	HAND RAIL 3/8" X 2" X 14-7/16" LONG	
R	153001△1	1	LEFT SAFETY RAIL 2" X 2" X 3/16" X 16-5/8" LONG	
S	153001△1	1	RIGHT SAFETY RAIL 2" X 2" X 3/16" X 16-5/8" LONG	
T	153001△4	2	BOTTOM RAIL (2 PC.) 2" X 2" X 3/16" X 14-5/8" LONG	

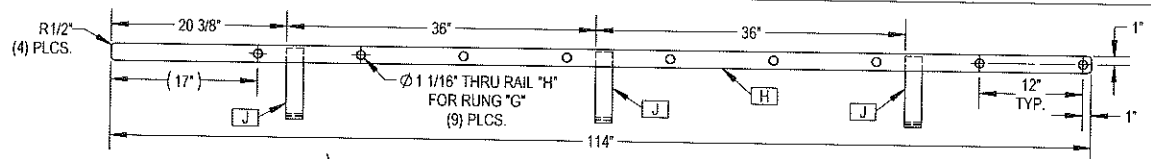

LADDER ASSEMBLY DETAIL △8

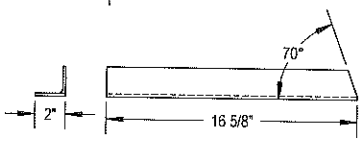

RIGHT SAFETY RAIL "S" DETAIL

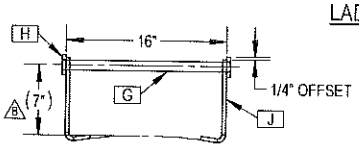

LADDER END VIEW

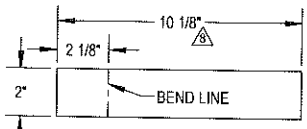

"J" FLAT PATTERN

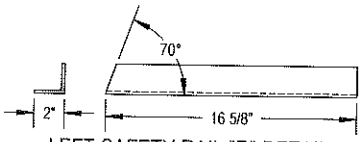

LEFT SAFETY RAIL "R" DETAIL

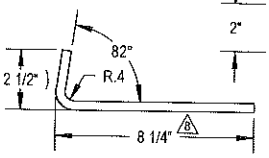

LADDER BRACKET "J" DETAIL

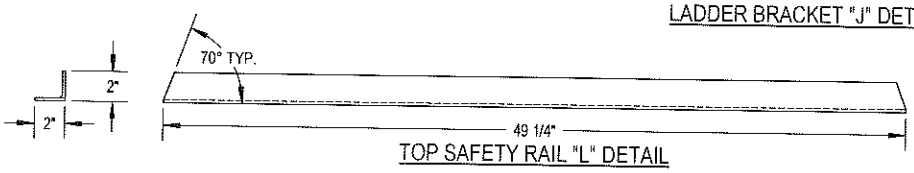

TOP SAFETY RAIL "L" DETAIL

96 X 72 NON-CODE
DRAWING APPROVAL

SAFETY RELIEF DEVICES SHALL BE THE RESPONSIBILITY OF THE END USER

PLEASE INDICATE APPROVAL FOR DRAWING & RETURN TO QUICK TANKS

☐ APPROVED AS DRAWN. PROCEED WITH FABRICATION

☐ APPROVED AS NOTED. PROCEED WITH FABRICATION IN ACCORDANCE WITH NOTED CHANGES. RESUBMIT CORRECTED DRAWING

☐ DISAPPROVED. DO NOT FABRICATE. RESUBMIT DRAWING FOR APPROVAL

BY_____ DATE_____

NON-CODE

REV.	DESCRIPTION	DATE	APPROVED
8	ADJUSTED LADDER DESIGN - JM	3/6/13	
7	BACK TO ORIGINAL (6) LEG DESIGN - JM	2/19/13	
6	R/T WAS ENVIROSHIELD 233 (140°F MAX); "H2" WAS H C REARRANGED LEGS, DELETED ITEMS "C" & "D" - JM	2/18/13	
5	PAINT WAS 141/161 - BJC	3/15/10	

DATE: 4/15/08 DRAWN BY: JM SIZE: B SCALE: NTS

SES9672LCL REV.8

THIS PRINT, IN ALL MEDIA FORMATS, IS THE SOLE PROPERTY OF QUICK TANKS, INC. REPRODUCTION OR DISSEMINATION IS STRICTLY PROHIBITED WITHOUT PRIOR WRITTEN CONSENT.